NOTES: UNLESS OTHERWISE SPECIFIED

1. ALL DIMENSIONS ARE IN INCHES.
2. DRAIN BODY MATERIAL: 14GA STAINLESS STEEL T304/T316
3. SPECIFYING ENGINEER IS RESPONSIBLE FOR CONCRETE ENCASEMENT AND REINFORCING BASED UPON APPLICATION AND LOCAL CODES.
4. REFER TO https://info.slotdrainsystems.com/installresources FOR INSTALLATION INSTRUCTIONS.

REVISIONS			
REV	DESCRIPTION	DATE	BY
0	INITIAL RELEASE – R0	6/8/2019	DK
1	UPDATED DRAIN SECTIONS.	12/2/2019	DK
2	UPDATED DRAIN LAYOUT WITH REBAR	12/2/2020	DK
3	UPDATED WITH 10KS DRAIN AND GLOBAL DRAIN TEMPLATE	3/19/2024	DK

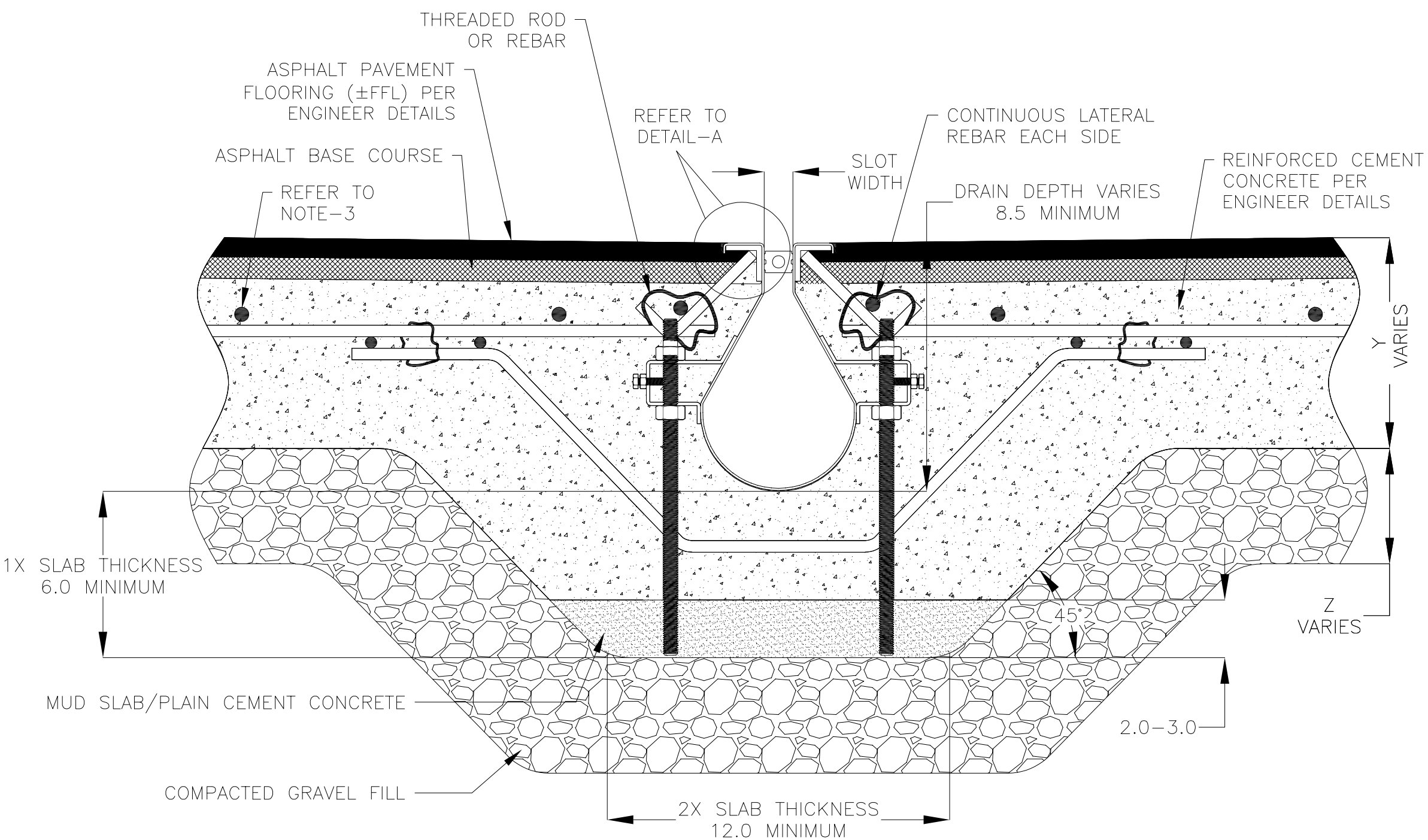

10000 SERIES SLOT DRAIN INSTALLATION DETAILS

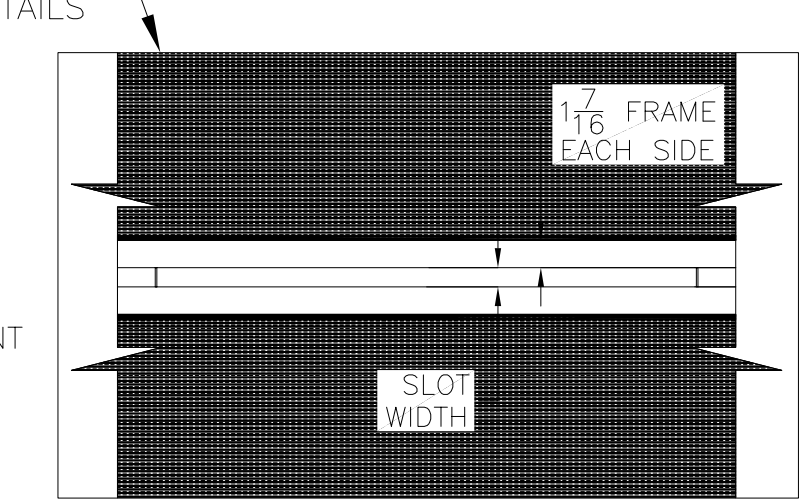

PLAN VIEW

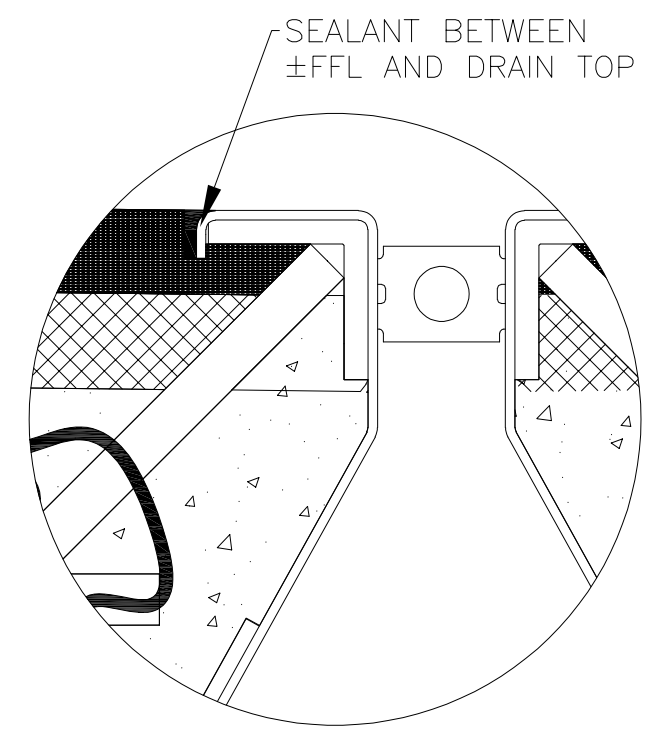

DETAIL–A

GLOBAL DRAIN TECHNOLOGIES

DRAWING TITLE: ASPHALT FLOOR–NEW CONSTRUCTION INSTALLATION

ALL DRAWINGS ARE THE EXCLUSIVE PROPERTY OF SLOT DRAIN SYSTEMS. ANY REPRODUCTION IN PART OR IN WHOLE IS PROHIBITED WITHOUT PROPER CONSENT.

DRAIN SERIES	REV.
10000 SERIES SLOT DRAIN	3

DWG NO.	SIZE	SCALE	SHEET
IN–SD10000–002–R3	B	NTS	1 OF 1